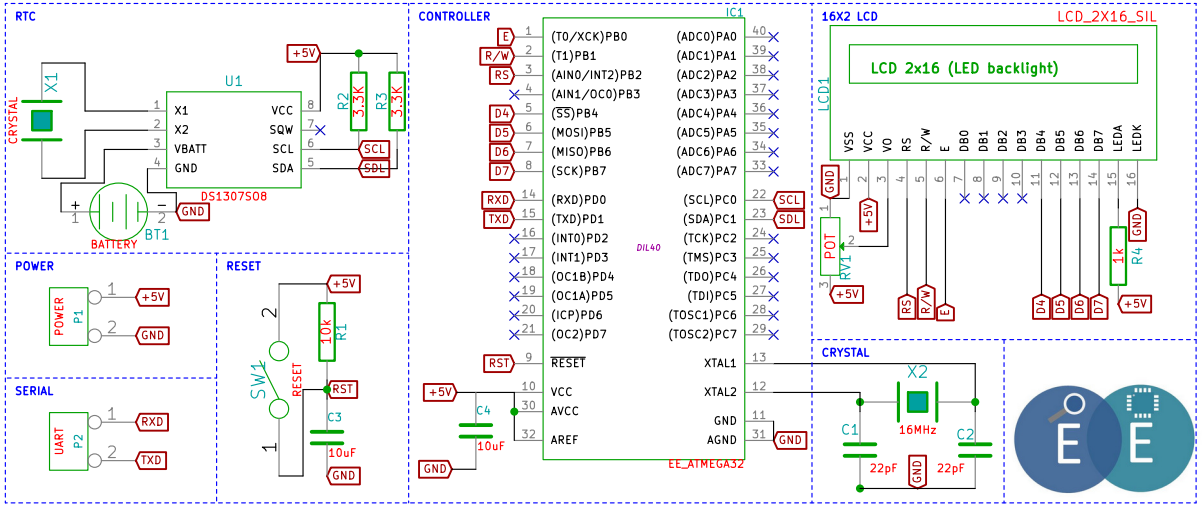

File: RTC.sch		
Sheet: /		
Title:		
Size: A4	Date: 21 jun 2014	Rev:
KiCad E.D.A.		Id: 1/1